Meals & Memories *are made here*

2025 Catalog

MK WOOD CABINETRY

Elite Series

Features:

- ¾" thick x 1½" wide solid wood face frame and panel.
- ½" thick plywood sides cabinet box.
- ¾" solid wood dovetailed drawer box sides.
- Dovetailed construction with corner bracing for extra support.
- ⅞" plywood adjustable shelf edge-banded.
- High quality steel, full extension drawer slides with soft close safety feature.
- Applied rope molding and nine piece raised panel drawer front.
- Heavy duty steel concealed, six way adjustable hinges with soft close feature.
- Full overlay mitered door construction.
- Solid birch stiles and rails.
- HDF central panel (to avoid cracks).
- Natural finish interior.

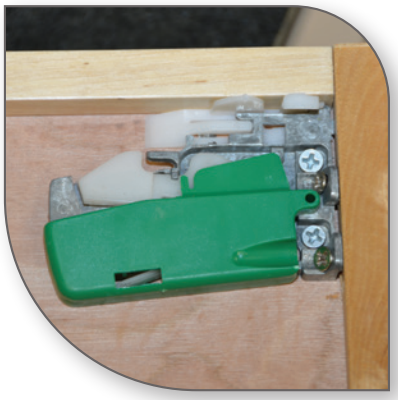

Antique White color shown

www.mkwoodcabinets.com | 973.450.5110 | 55 Lathrop Road, Ext #1, Plainfield, CT 06374

Available Colors*:

Frost

Cloud White

Dove

Linen

Pitch Black

Graphite Black

Nickel

Gable Gray

Hunter Green

Pistachio Green

Sage Green

Gobble Brown

Naval

Denim Blue

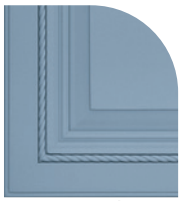
Ocean Blue

Elite Series: Where Tradition Meets Modern Excellence

Step into a world of refined luxury with the **Elite Series**, a collection that masterfully combines the elegance of traditional design with the precision of modern craftsmanship. Featuring exquisite **rope molding** for a classic, sophisticated touch, and **mitered raised panel door construction** that offers both timeless beauty and exceptional durability, this series elevates any kitchen into a space of opulence. The **Elite Series** delivers a perfect balance of **historical charm** and **modern longevity**, designed to stand the test of time while adding a touch of refined elegance. Crafted for those who seek both style and substance, the **Elite Series** is a stunning addition to any kitchen, blending past and present most gracefully.

Classic Series

Features:

- ¾" thick x 1½" wide solid wood face frame and panel.
- ½" thick plywood sides cabinet box.
- ¾" solid wood dovetailed drawer box sides.
- Dovetailed construction with corner bracing for extra support.
- ⅞" plywood adjustable shelf edge-banded.
- High quality steel, full extension drawer slides with soft close safety feature.
- Full overlay tenon and mortise door construction.
- Applied moulding and five piece recessed panel drawer front.
- Heavy duty steel concealed, six way adjustable hinges.
- Full overlay door with mortise & tenon construction.
- Solid birch stiles and rails.
- HDF central panel (to avoid cracks).
- Natural finish interior.

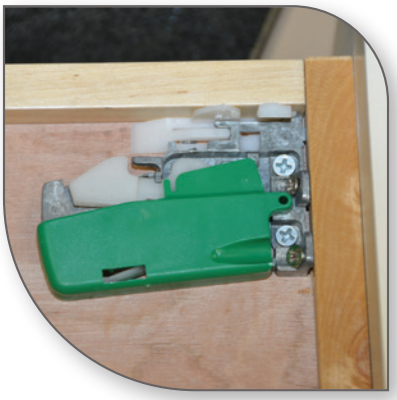

Antique White color shown

www.mkwoodcabinets.com | 973.450.5110 | 55 Lathrop Road, Ext #1, Plainfield, CT 06374

Available Colors*:

Frost

Cloud White

Dove

Linen

Pitch Black

Graphite Black

Nickel

Gable Gray

Hunter Green

Pistachio Green

Sage Green

Gobble Brown

Naval

Denim Blue

Ocean Blue

Classic Series: Timeless Elegance for Your Kitchen

Step into a world of refined luxury with the **Classic Series**. These cabinets embody the charm of Old World craftsmanship, offering a rich, raised-panel door design paired with beautifully intricate trim accents. The soft-closing drawers and doors provide effortless, quiet functionality, making this collection as practical as it is stunning. Perfect for those who appreciate a blend of heritage-inspired beauty and modern convenience, the **Classic Series** transforms any kitchen into an enduring masterpiece of style and sophistication.

Elegance Series

Features:

- ¾" thick x 1½" wide solid wood face frame.
- ½" thick plywood sides cabinet box.
- ¾" solid wood dovetailed drawer box sides.
- Dovetailed construction with corner bracing for extra support.
- ⅞" plywood adjustable shelf edge-banded.
- High quality steel, full extension drawer slides with soft close safety feature.
- Five piece flat panel drawer front.
- Heavy duty steel concealed, six way adjustable hinges with soft close feature.
- Full overlay tenon and mortise door construction.
- Solid birch stiles and rails.
- HDF central panel (to avoid cracks).
- Natural finish interior.

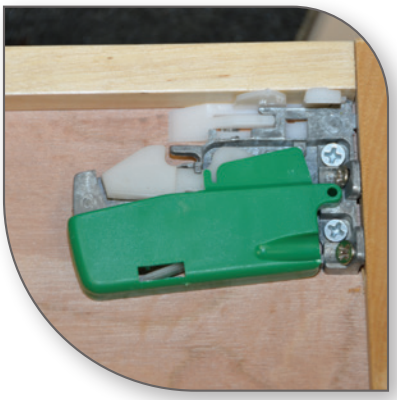

Gobble Brown color shown

www.mkwoodcabinets.com | 973.450.5110 | 55 Lathrop Road, Ext #1, Plainfield, CT 06374

Available Colors*:

Frost

Cloud White

Dove

Linen

Pitch Black

Graphite Black

Nickel

Gable Gray

Hunter Green

Pistachio Green

Sage Green

Gobble Brown

Naval

Denim Blue

Ocean Blue

Elegance Series: A Perfect Fusion of Modern and Classic

Discover the ultimate in kitchen refinement with the **Elegance Series**. With sleek, straight-lined doors and transitional trim, this collection offers a timeless look that effortlessly bridges the gap between modern and traditional design. The flat central panels bring a touch of subtle sophistication, while the elegant simplicity adds a refreshing sense of renewal to any space. Whether you're updating your kitchen to a contemporary masterpiece or seeking a touch of timeless charm, the **Elegance Series** delivers a perfect balance of beauty, functionality, and style.

Petite Shaker Series

Features:

- ¾" thick x 1½" wide solid wood face frame.
- ½" thick plywood sides cabinet box.
- ¾" solid wood dovetailed drawer box sides.
- Dovetailed construction with corner racing for extra support.
- ⅞" plywood adjustable shelf edge-banded.
- High quality steel, full extension drawer slides with soft close safety feature.
- Five piece flat panel drawer front.
- Heavy duty steel concealed, six way adjustable hinges with soft close feature.
- Full overlay tenon and mortise door construction.
- Solid birch stiles and rails.
- HDF central panel (to avoid cracks).
- Natural finish interior.

Naval color shown

www.mkwoodcabinets.com | 973.450.5110 | 55 Lathrop Road, Ext #1, Plainfield, CT 06374

Available Colors*:

Frost | Cloud White | Dove | Linen | Pitch Black | Graphite Black | Nickel | Gable Gray

Hunter Green | Pistachio Green | Sage Green | Gobble Brown | Naval | Denim Blue | Ocean Blue

Petite Shaker Cabinet: Understated Elegance for Every Kitchen

Elevate your kitchen with the **Petite Shaker Cabinet**, where sleek design meets timeless appeal. Crafted from high-quality solid wood, these cabinets offer exceptional durability while maintaining a refined, minimalist aesthetic. The slim trim and soft-close mechanism combine practicality with luxury, ensuring every door and drawer closes effortlessly and silently. Perfect for those who appreciate sophisticated design with a subtle touch of elegance, the **Petite Shaker** is a statement piece in any kitchen.

Shaker Series

Features:

- ¾" thick x 1½" wide solid wood face frame.
- ½" thick plywood sides cabinet box.
- ¾" solid wood dovetailed drawer box sides.
- Dovetailed construction with corner racing for extra support.
- ⅞" plywood adjustable shelf edge-banded.
- High quality steel, full extension drawer slides with soft close safety feature.
- Five piece flat panel drawer front.
- Heavy duty steel concealed, six way adjustable hinges with soft close feature.
- Full overlay tenon and mortise door construction.
- Solid birch stiles and rails.
- HDF central panel (to avoid cracks).
- Natural finish interior.

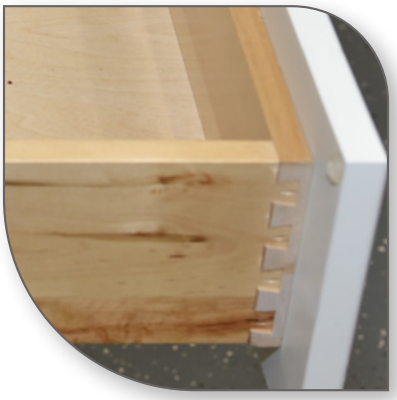

Sage Green color shown

www.mkwoodcabinets.com | 973.450.5110 | 55 Lathrop Road, Ext #1, Plainfield, CT 06374

Available Colors*:

Frost

Cloud White

Dove

Linen

Pitch Black

Graphite Black

Nickel

Gable Gray

Hunter Green

Pistachio Green

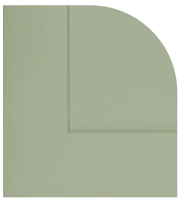
Sage Green

Gobble Brown

Naval

Denim Blue

Ocean Blue

Shaker Series: A Cheerful Touch of Contemporary Style

Bring warmth and vibrancy to your kitchen with the **Shaker Series**. These cabinets feature a modern finish and vibrant, contemporary colors that breathe life into any space. With smooth, sleek doors and the convenience of soft-closing drawers and doors, the **Shaker Series** is a perfect blend of style and function. This collection offers an energetic yet timeless design that's sure to brighten your kitchen with charm and sophistication, making it a space you'll love to gather in.

Stanford Series

LIMITED SUPPLY

Features:

- ¾" thick x 1½" wide solid wood face frame and panel.
- ½" thick plywood sides cabinet box.
- ¾" solid wood dovetailed drawer box sides.
- Dovetailed construction with corner bracing for extra support.
- ⅞" plywood adjustable shelf edge-banded.
- High quality steel, full extension drawer slides with soft close safety feature.
- Five pieces raised panel drawer front.
- Heavy duty steel concealed, six way adjustable hinges with soft close future.
- Full overlay tenon and mortise door construction.
- Solid wood raised central panel.
- Solid birch stiles and rails.
- Natural finish interior.

Ocean Blue color shown

www.mkwoodcabinets.com | 973.450.5110 | 55 Lathrop Road, Ext #1, Plainfield, CT 06374

Available Colors*:

Frost | Cloud White | Dove | Linen | Pitch Black | Graphite Black | Nickel | Gable Gray

Hunter Green | Pistachio Green | Sage Green | Gobble Brown | Naval | Denim Blue | Ocean Blue

Stanford Series: Elegant Design, Superior Craftsmanship

The **Stanford Series** brings an air of sophistication to your kitchen with its rich, raised-panel doors and durable, high-quality construction. Featuring under-mount soft-close full-extension drawer slides and six-way adjustable hinges, this collection ensures smooth, silent operation with every use. Natural wood drawer boxes add a touch of warmth and character, complementing the overall elegance. Perfect for those who seek a blend of timeless style and modern practicality, the **Stanford Series** enhances any kitchen with its enduring beauty and functionality.

Plainfield Series

LIMITED SUPPLY

Features:

- ¾" thick x 1½" wide solid wood face frame.
- ½" thick plywood sides cabinet box.
- ¾" solid wood dovetailed drawer box sides.
- Corner metal bracing construction with l bracket bracing for extra support.
- ⅞" plywood adjustable shelf edge-banded.
- High quality steel, full extension drawer slides with soft close safety feature.
- Five pieces raised panel drawer front.
- Heavy duty steel concealed, six way adjustable hinges with soft close future.
- Full overlay tenon and mortise door construction.
- Veneered raised central panel.
- Solid birch stiles and rails.
- Matching finish interior.

Cloud White color shown

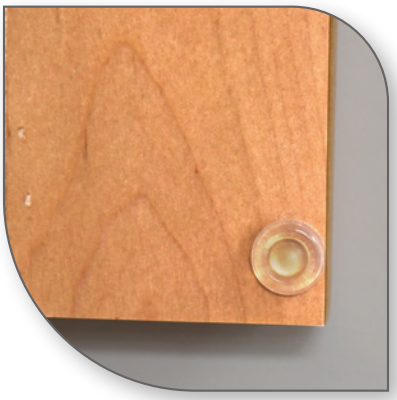

www.mkwoodcabinets.com | 973.450.5110 | 55 Lathrop Road, Ext #1, Plainfield, CT 06374

Available Colors*:

Frost

Cloud White

Dove

Linen

Pitch Black

Graphite Black

Nickel

Gable Gray

Hunter Green

Pistachio Green

Sage Green

Gobble Brown

Naval

Denim Blue

Ocean Blue

Plainfield Series: Timeless Quality, Lasting Beauty

Add classic charm to your kitchen with the **Plainfield Series**, where quality meets style. These cabinets feature solid wood, full-overlay doors with a soft-close mechanism for seamless functionality. The warm, pleasant colors and sturdy construction ensure that the **Plainfield Series** will stand the test of time. Designed to offer both beauty and practicality, these cabinets are perfect for homeowners seeking durability without sacrificing aesthetics. The **Plainfield Series** is the perfect choice for creating a kitchen that radiates charm, reliability, and timeless appeal.

Welcome

MK Wood is one of the fastest growing Kitchen Conglomerate in the United States. We Compromise on Price, not Quality.

We are a premier manufacturer and distributor of wholesale kitchen cabinets servicing clients nationwide. We only offer the highest quality cabinet products designed to give your kitchen the look and feel that you have always imagined. We pride ourselves in providing our Dealers with the best quality kitchen cabinets at unbeatable prices.

MK Wood products are made with high end components and assembled in the US, that significantly outshine competitively made kitchens of the same price bracket. So when dealing with the finery of **MK Wood** cabinetry, it's hard to believe that our solid wood products are considerably less expensive than others produced particle board kitchens.

MK Wood cabinetry features wood construction, superior hardware, and durable paints and finishes. We carefully designed each distinctive style to make sure your kitchen stands out.

Beauty. Function. Strength. Performance. Is what you'll find. These values are built into every **MK Wood** cabinetry product. Together they make up our quality assurance. It's our promise to you—one that we've been keeping right from the start. Our promise to deliver beautiful cabinet finishes that are also durable, unmatched in strength, and have lasting performance with our soft-close doors, drawers, roll-out- trays and pullouts.

At **MK Wood**, we keep our process simple by fine-tuning our operations and products to be as efficient as possible. As a certified member of the National Kitchen & Bath Association (**NKBA**), **MK Wood** demonstrates an ongoing commitment to sustainability. This includes the use of environmentally responsible materials in cabinet products and reduced environmental impact realized through recycling wastes and using low emission coatings. By achieving this **MK Wood** goes beyond minimum industry requirements and demonstrates leadership in a growing area of concern and importance.

So with **MK Wood** not only are you getting the finest cabinetry and highest quality at an affordable price, you are also keeping the earth a little more sustainable.

Carb2 compliant

NKBA NATIONAL KITCHEN+BATH ASSOCIATION

Wall Cabinets 12" deep 30" High

1 Door

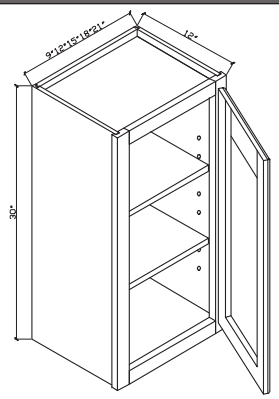

ITEM	Description	A	B	C	D
W0930	09"Wx12"Dx30"H 1D 2S	188	210	216	235
W1230	12"Wx12"Dx30"H 1D 2S	213	239	245	266
W1530	15"Wx12"Dx30"H 1D 2S	225	252	259	281
W1830	18"Wx12"Dx30"H 1D 2S	236	264	271	295
W2130	21"Wx12"Dx30"H 1D 2S	292	327	336	365

Wall Cabinets 12" deep 30" High

2 Doors

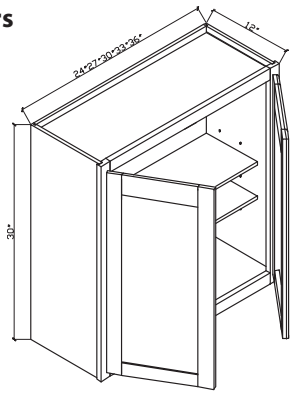

ITEM	Description	A	B	C	D
W2430	24"Wx12"Dx30"H 2D 2S	326	365	375	408
W2730	27"Wx12"Dx30"H 2D 2S	342	383	393	428
W3030	30"Wx12"Dx30"H 2D 2S	370	414	426	463
W3330	33"Wx12"Dx30"H 2D 2S	407	456	468	509
W3630	36"Wx12"Dx30"H 2D 2S	434	486	499	543

Wall cabinets 12" deep 36" High

1 Door

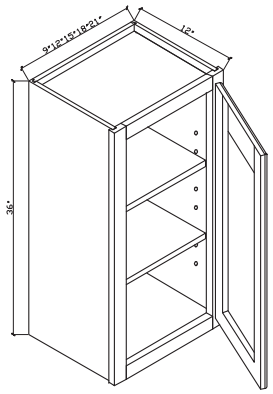

ITEM	Description	A	B	C	D
W0936	09"Wx12"Dx36"H 1D 2S			213	
W1236	12"Wx12"Dx36"H 1D 2S			243	
W1536	15"Wx12"Dx36"H 1D 2S			273	
W1836	18"Wx12"Dx36"H 1D 2S			309	
W2136	21"Wx12"Dx36"H 1D 2S			329	

Wall cabinets 12" deep 36" High

2 Doors

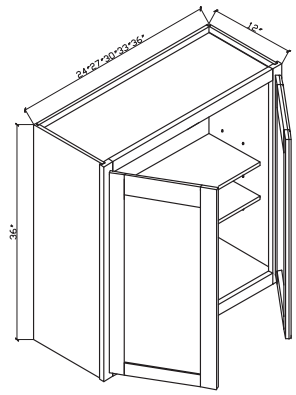

ITEM	Description	A	B	C	D
W2436	24"Wx12"Dx36"H 2D 2S			397	
W2736	27"Wx12"Dx36"H 2D 2S			422	
W3036	30"Wx12"Dx36"H 2D 2S			551	
W3336	33"Wx12"Dx36"H 2D 2S			479	
W3636	36"Wx12"Dx36"H 2D 2S			528	

Wall cabinets 12" deep 39"High

1 Door

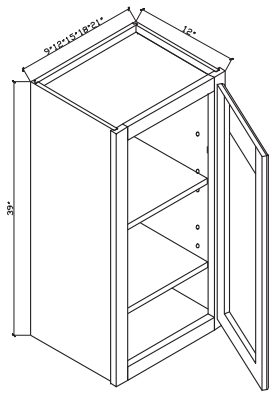

ITEM	Description	A	B	C	D
W0939	09"Wx12"Dx39"H 1D 3S	243	272		304
W1239	12"Wx12"Dx39"H 1D 3S	258	289		323
W1539	15"Wx12"Dx39"H 1D 3S	294	329		368
W1839	18"Wx12"Dx39"H 1D 3S	332	372		415
W2139	21"Wx12"Dx39"H 1D 3S	360	403		450

Wall cabinets 12" deep 39"High

2 Doors

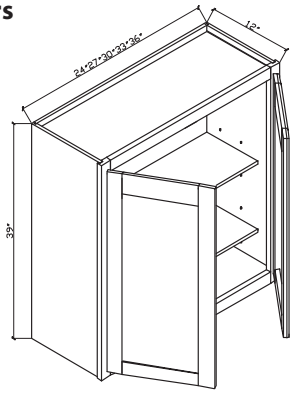

ITEM	Description	A	B	C	D
W2439	24"Wx12"Dx39"H 2D 3S	397	445		496
W2739	27"Wx12"Dx39"H 2D 3S	438	491		548
W3039	30"Wx12"Dx39"H 2D 3S	462	517		578
W3339	33"Wx12"Dx39"H 2D 3S	499	559		624
W3639	36"Wx12"Dx39"H 2D 3S	538	603		673

Wall cabinets 12" deep 42"High

1 Door

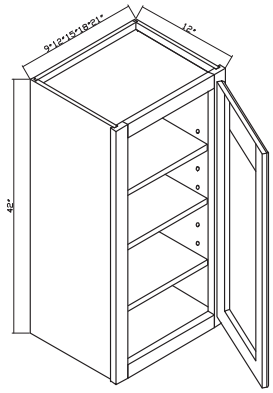

ITEM	Description	A	B	C	D
W0942	09"Wx12"Dx42"H 1D 3S			272	
W1242	12"Wx12"Dx42"H 1D 3S			297	
W1542	15"Wx12"Dx42"H 1D 3S			320	
W1842	18"Wx12"Dx42"H 1D 3S			361	
W2142	21"Wx12"Dx42"H 1D 3S			412	

Wall cabinets 12" deep 42"High

2 Doors

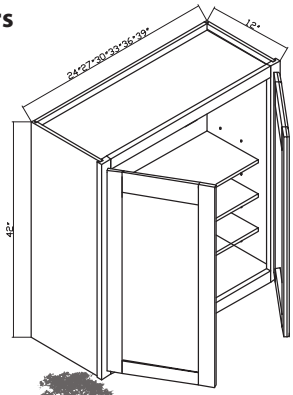

ITEM	Description	A	B	C	D
W2442	24"Wx12"Dx42"H 2D 3S			467	
W2742	27"Wx12"Dx42"H 2D 3S			508	
W3042	30"Wx12"Dx42"H 2D 3S			533	
W3342	33"Wx12"Dx42"H 2D 3S			576	
W3642	36"Wx12"Dx42"H 2D 3S			619	

A — **EL** = *Elegance Series* | **SR** = *Shaker Series* | B — **PS** = *Petite Shaker Series* | **PF** = *Plainfield Series* | C — **ST** = *Stanford Series* | **CL** = *Classic Series* | D — **ER** = *Elite Series*

Wall cabinets 12" High

2 Doors

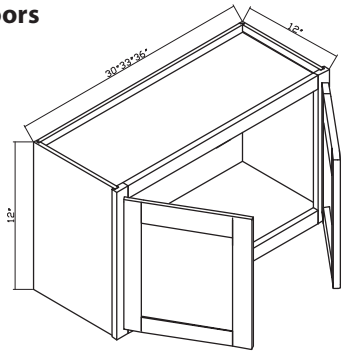

ITEM	Description	A	B	C	D
W2412	24"Wx12"Dx12"H 2D	182	204	209	228
W3012	30"Wx12"Dx12"H 2D	215	241	247	269
W3312	33"Wx12"Dx12"H 2D	231	259	266	289
W3612	36"Wx12"Dx12"H 2D	232	260	267	290

Wall cabinets 15" High

2 Doors

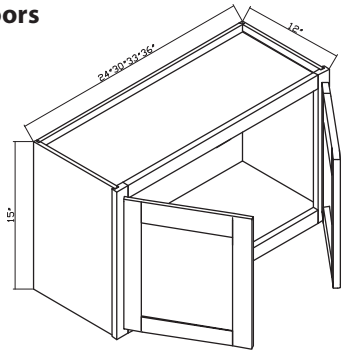

ITEM	Description	A	B	C	D
W2415	24"Wx12"Dx15"H 2D	218	244	251	273
W3015	30"Wx12"Dx15"H 2D	241	270	277	301
W3315	33"Wx12"Dx15"H 2D	257	288	296	321
W3615	36"Wx12"Dx15"H 2D	259	290	298	324

Wall cabinets 18" High

2 Doors

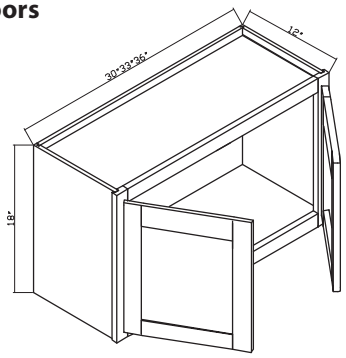

ITEM	Description	A	B	C	D
W2418	24"Wx12"Dx18"H 2D	214	240	246	268
W3018	30"Wx12"Dx18"H 2D	254	284	292	318
W3318	33"Wx12"Dx18"H 2D	279	312	321	349
W3618	36"Wx12"Dx18"H 2D	281	315	315	351

Wall cabinets 21" High/24" Hight

2 Doors

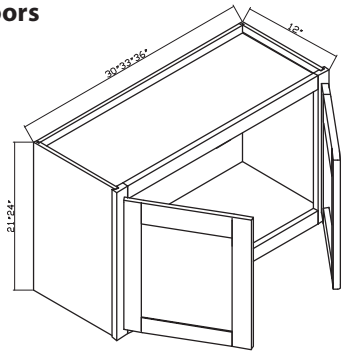

ITEM	Description	A	B	C	D
W2421	24"Wx12"Dx21"H 2D 1S	261	292	300	326
W3021	30"Wx12"Dx21"H 2D 1S	272	305	313	340
W3321	33"Wx12"Dx21"H 2D 1S	299	335	344	374
W3621	36"Wx12"Dx21"H 2D 1S	327	366	376	409
W2424	24"Wx12"Dx24"H 2D 1S	284	318	327	355
W3024	30"Wx12"Dx24"H 2D 1S	311	348	358	389
W3324	33"Wx12"Dx24"H 2D 1S	328	367	377	410
W3624	36"Wx12"Dx24"H 2D 1S	315	353	362	394

Wine Rack

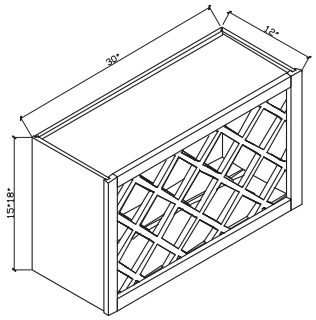

ITEM	Description	A	B	C	D
WWR3015	30"Wx12"Dx15"H	171	171	171	171
WWR3018	30"Wx12"Dx18"H	188	188	188	188
SGR	Stem Glass Holder	121	121	121	121

Wall Blind Cabinets

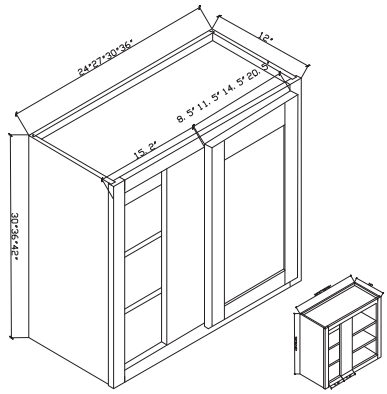

ITEM	Description	A	B	C	D
BLW3030	30"Wx12"Dx30"H 1D 2S	321	359	369	401
BLW3036	30"Wx12"Dx36"H 1D 2S			395	
BLW3039	30"Wx12"Dx39"H 1D 2S	470	528	541	588
BLW3042	30"Wx12"Dx42"H 1D 3S			421	
BLW3630	36"Wx12"Dx30"H 1D 2S	373	418	429	466
BLW3636	36"Wx12"Dx36"H 1D 2S			432	
BLW3639	36"Wx12"Dx39"H 1D 2S	528	591	607	660
BLW3642	36"Wx12"Dx42"H 1D 2S			462	

24" Deep Wall Cabinets

2 Doors

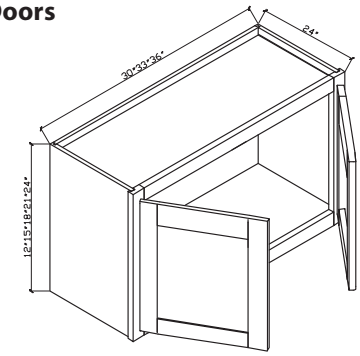

ITEM	Description	A	B	C	D
W301224	30"Wx12"Hx24"D 2D	229	256	263	286
W301524	30"Wx15"Hx24"D 2D 1S	286	320	329	358
W301824	30"Wx18"Hx24"D 2D	339	380	390	424
W302124	30"Wx21"Hx24"D 2D	300	336	345	375
W302424	30"Wx24"Hx24"D 2D 1S	319	357	367	399
W331224	33"Wx12"Hx24"D 2D	246	276	283	308
W331524	33"Wx15"Hx24"D 2D 1S	305	342	351	381
W361224	36"Wx12"Hx24"D 2D 1S	327	366	376	409
W361524	36"Wx15"Hx24"D 2D 1S	344	385	396	430
W361824	36"Wx18"Hx24"D 2D 1S	374	419	430	468
W362124	36"Wx21"Hx24"D 2D 1S	390	437	449	488
W362424	36"Wx24"Hx24"D 2D 1S	446	500	513	558

Wall Diagonal Cabinets

1 Door

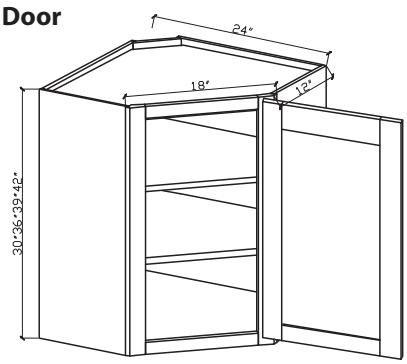

ITEM	Description	A	B	C	D
WDC2430	24"Wx24"Dx30"H 1D 2S	418	468	481	523
WDC2436	24"Wx24"Dx36"H 1D 2S			567	
WDC2439	24"Wx24"Dx39"H 1D 2S	543	608	624	679
WDC2442	24"Wx24"Dx42"H 1D 3S			640	

MK WOOD

A — **EL** = *Elegance Series* | **SR** = *Shaker Series* | **PS** = *Petite Shaker Series* | B — **PF** = *Plainfield Series* | **ST** = *Stanford Series* | C — **CL** = *Classic Series* | D — **ER** = *Elite Series*

Wall Corner Cabinet

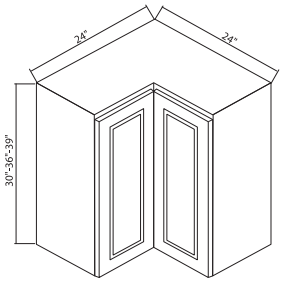

ITEM	Description	A	B	C	D
WSQ2430	24"Wx30"Hx12"D 2D 2S	539	604	620	674
WSQ2436	24"Wx36"Hx12"D 2D 2S			629	
WSQ2439	24"Wx39"Hx12"D 2D 2S	694	777	798	868

Microwave Wall Cabinet

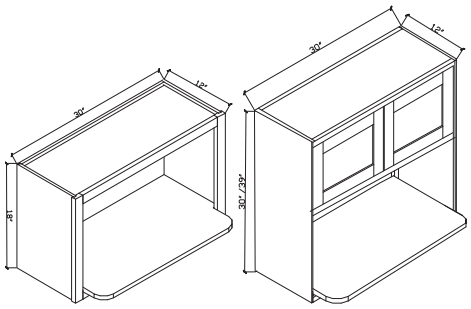

MW3018 MW3030 - MW3036 - MW3039

ITEM	Description	A	B	C	D
MW3018	30"Wx18"Hx12"D	219	245	252	274
MW3030	30"Wx30"Hx12"D	441	494	507	551
MW3036	30"Wx36"Hx12"D			418	
MW3039	30"Wx39"Hx12"D	568	636	653	710

Wall End 24

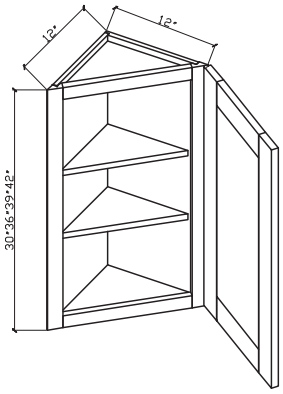

ITEM	Description	A	B	C	D
WEC1230	12"Wx30"H 1S 1D	240	269	276	300
WEC1236	13"Wx36"H 1S 1D			316	
WEC1239	12"Wx39"H 1S 1D	380	426	437	475
WEC1242	14"Wx42"H 1S 1D			492	

Wall Cabinet - 2 Built In Drawers

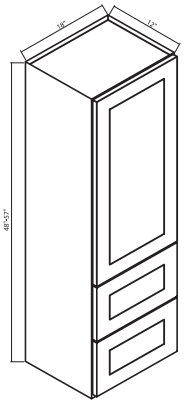

ITEM	Description	A	B	C	D
W2D1848	18"Wx48"Hx12"D 1D 2D 2S	825	924	949	1031
W2D1854	18"Wx54"Hx12"D 1D 2D 2S			979	
W2D1857	18"Wx57"Hx12"D 1D 2D 2S	887	993	1020	1109

Floating Shelves

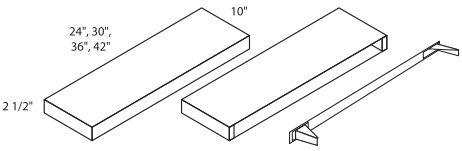

ITEM	Description	A	B	C	D
FLS24	24"Wx2½"Hx10"D	225	225	225	225
FLS30	30"Wx2½"Hx10"D	247	247	247	247
FLS36	36"Wx2½"Hx10"D	269	269	269	269
FLS42	42"Wx2½"Hx10"D	291	291	291	291

Corner Shelf Top Plate

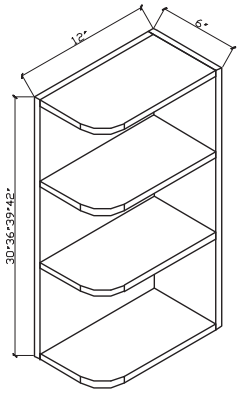

ITEM	Description	A	B	C	D
CS630	06"Wx12"Dx30"H 4S	158	177	182	198
CS636	06"Wx12"Dx36"H 4S			209	
CS639	06"Wx12"Dx39"H 4S	234	262		293
CS642	06"Wx12"Dx42"H 5S			277	

Corner Shelf Base Plate

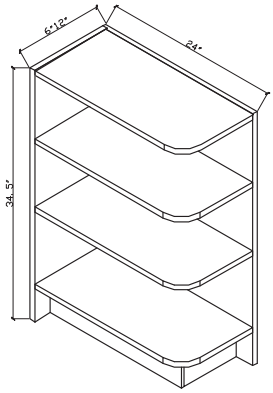

ITEM	Description	A	B	C	D
BES06	06"Wx24"Dx30"H 4S	218	245	251	273
BES12	12"Wx24"Dx30"H 4S	300	337	346	376

MULLION DOORS

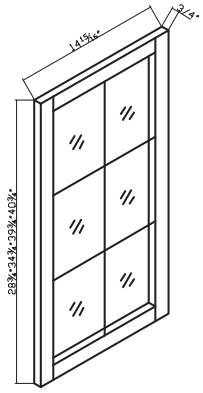

ITEM	Description	A	B	C	D
WDC2430MD	1 Mullion Door 14 15/16"Wx28¾"Hx¾"D	167	187	192	209
WDC2436MD	1 Mullion Door 14 15/16"Wx34¾"Hx¾"D			258	
WDC2439MD	1 Mullion Door 14 15/16"Wx39¾"Hx¾"D	208	246		274
WDC2442MD	1 Mullion Door 14 15/16"Wx40¾"Hx¾"D			289	

MK WOOD

A — **EL** = *Elegance Series* | **SR** = *Shaker Series* | **PS** = *Petite Shaker Series* | B — **PF** = *Plainfield Series* | **ST** = *Stanford Series* | C — **CL** = *Classic Series* | D — **ER** = *Elite Series*

Base Cabinets 34½" H x 24" Deep

1 Door

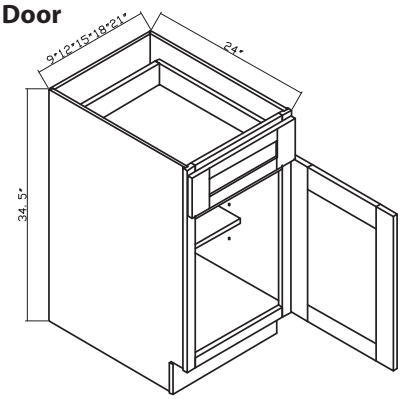

ITEM	Description	A	B	C	D
B09	09"Wx24"Dx34½"H 1D 1DR 1S	293	328	337	366
B12	12"Wx24"Dx34½"H 1D 1DR 1S	325	364	374	406
B15	15"Wx24"Dx34½"H 1D 1DR 1S	356	399	409	445
B18	18"Wx24"Dx34½"H 1D 1DR 1S	385	431	443	481
B21	21"Wx24"Dx34½"H 1D 1DR 1S	416	466	478	520

Base Cabinets 34½" H x 24" Deep

2 Doors

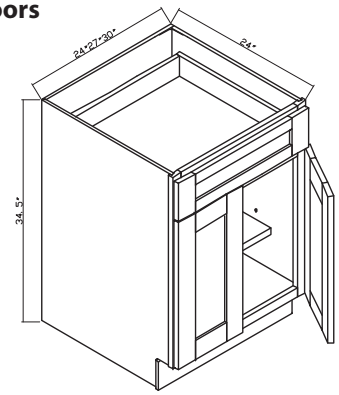

ITEM	Description	A	B	C	D
B24	24"Wx24"Dx34½"H 2D 1DR 1S	456	511	524	570
B27	27"Wx24"Dx34½"H 2D 1DR 1S	492	551	566	615
B30	30"Wx24"Dx34½"H 2D 2DR 1S	519	581	597	649
B33	33"Wx24"Dx34½"H 2D 2DR 1S	551	617	634	689
B36	36"Wx24"Dx34½"H 2D 2DR 1S	591	662	680	739

Blind Base Cabinets

1 Door

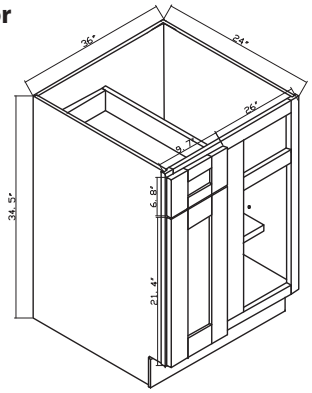

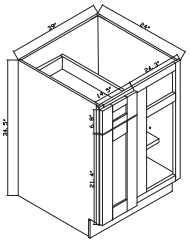

ITEM	Description	A	B	C	D
BBC36/39	36"Wx24"Dx34½"H 1D 1DR 1S	623	698	716	779
BBC39/42	39"Wx24"Dx34½"H 1D 1DR 1S	647	725	744	809
BBC42/45	42"Wx24"Dx34½"H 1D 1DR 1S	675	756	776	844

Sink Base Cabinets

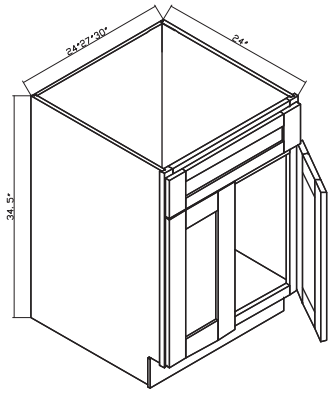

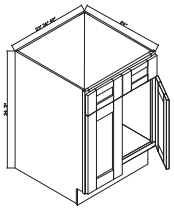

ITEM	Description	A	B	C	D
SB24	24"Wx24"Dx34½"H 2D 1H	389	436	447	485
SB27	27"Wx24"Dx34½"H 2D 1H	415	465	477	519
SB30	30"Wx24"Dx34½"H 2D 2H	429	480	493	436
SB33	33"Wx24"Dx34½"H 2D 2H	454	508	522	568
SB36	36"Wx24"Dx34½"H 2D 2H	489	548	562	611

Farmer Sink Base

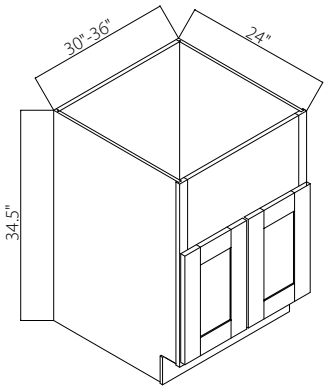

ITEM	Description	A	B	C	D
FSB30	30"Wx24"Dx34½"H	479	536	551	599
FSB33	33"Wx24"Dx34½"H	507	568	583	634
FSB36	36"Wx24"Dx34½"H	445	498	512	556

Drawer Base Units

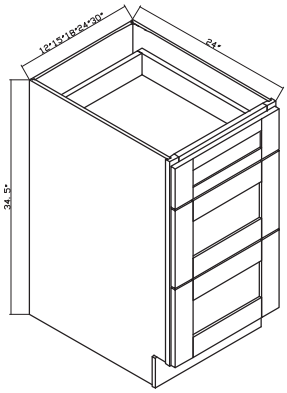

ITEM	Description	A	B	C	D
DB12-3	12"Wx34½"Hx24"D 3DR	541	606	622	676
DB15-3	15"Wx34½"Hx24"D 3DR	562	629	646	703
DB18-3	18"Wx34½"Hx24"D 3DR	578	647	665	723
DB21-3	21"Wx34½"Hx24"D 3DR	602	674	692	753
DB24-3	24"Wx34½"Hx24"D 3DR	653	731	751	816
DB30-3	30"Wx34½"Hx24"D 3DR	991	1110	1140	1239
DB36-3	36"Wx34½"Hx24"D 3DR	1079	1208	1241	1349

Drawer Pack

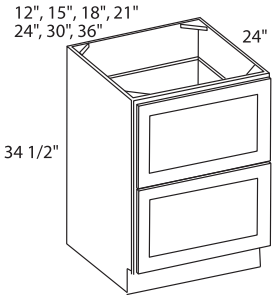

ITEM	Description	A	B	C	D
2DB12	12"Wx34½"Hx24"D 2DR	495	554	569	619
2DB15	15"Wx34½"Hx24"D 2DR	514	576	591	643
2DB18	18"Wx34½"Hx24"D 2DR	567	635	652	709
2DB21	21"Wx34½"Hx24"D 2DR	599	671	689	749
2DB24	24"Wx34½"Hx24"D 2DR	652	730	750	815
2DB30	30"Wx34½"Hx24"D 2DR	838	939	964	1048
2DB36	36"Wx34½"Hx24"D 2DR	1042	1167	1198	1303

Lazy Suzan

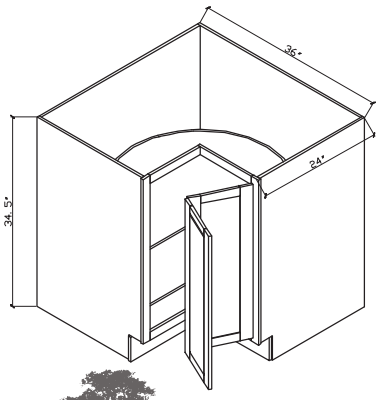

ITEM	Description	A	B	C	D
BLS3612 Lazy Suzan	36"Wx34½"Hx24"D With Turning Table	800	896	920	1001
BLS3312 Lazy Suzan	33"Wx34½"Hx24"D With Turning Table	754	845	868	943

A — **EL** = *Elegance Series* | **SR** = *Shaker Series* | **PS** = *Petite Shaker Series* | B — **PF** = *Plainfield Series* | **ST** = *Stanford Series* | C — **CL** = *Classic Series* | D — **ER** = *Elite Series*

Corner Sink Base

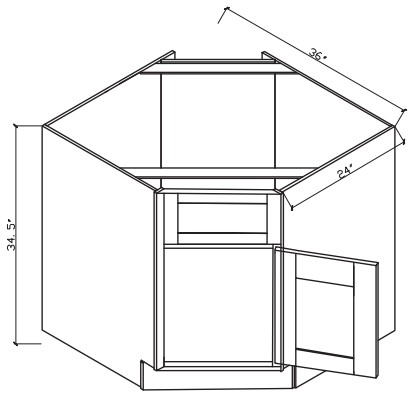

ITEM	Description	A	B	C	D
BEC36	36"x36"x34½"H	760	851	874	950

Base End 24

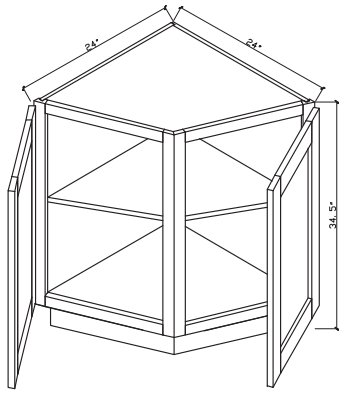

ITEM	Description	A	B	C	D
BEC24	24"x24"x34½"H	663	743	762	829

Base Spice Rack

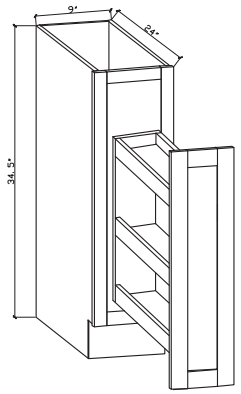

ITEM	Description	A	B	C	D
BSH09	9"Wx34½"H	680	762	782	850

Wall Spice Rack

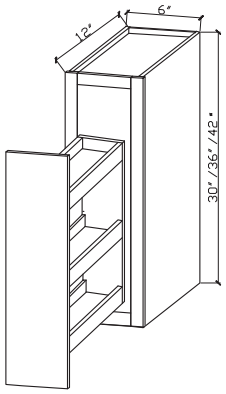

ITEM	Description	A	B	C	D
WSP30	6"Wx30"Hx22"D	267	299	307	333
WSP36	6"Wx36"Hx22"D			370	
WSP39	6"Wx39"Hx22"D	320	359	368	401
WSP42	6"Wx42"Hx22"D			390	

A — B — C — D

EL = *Elegance Series* | **SR** = *Shaker Series* | **PS** = *Petite Shaker Series* | **PF** = *Plainfield Series* | **ST** = *Stanford Series* | **CL** = *Classic Series* | **ER** = *Elite Series*

Base Cabinet with Garbage Roll Out

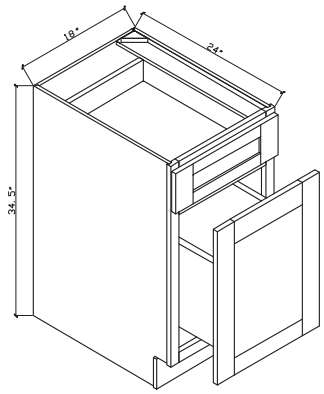

ITEM	Description	A	B	C	D
BT18	18"Wx34½"Hx24"D	840	941	966	1050

Set of 2 plastic bins $25 net

Base Microwave cabinet

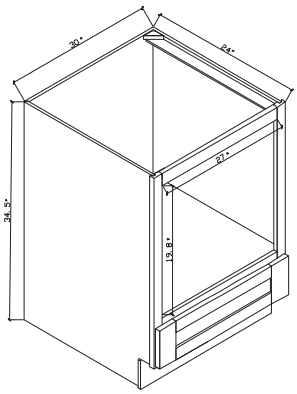

ITEM	Description	A	B	C	D
BMC30	30"Wx34½"Hx24"D	501	561	576	626

Manor Hood

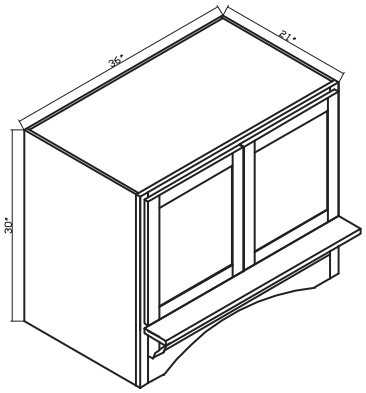

ITEM	Description	A	B	C	D
HC36 Manor Hood	36"Wx30"Hx21"D	1959	1959	1959	1959

English Hood

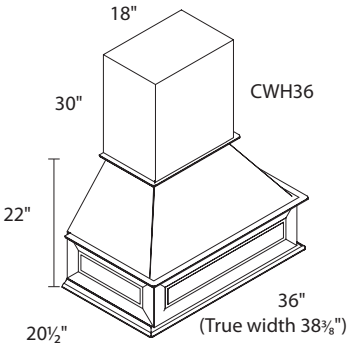

ITEM	Description	A	B	C	D
WHF36 English Hood		1654	1654	1654	1654

MK WOOD

A — **EL** = *Elegance Series* | **SR** = *Shaker Series* | **PS** = *Petite Shaker Series*
B — **PF** = *Plainfield Series* | **ST** = *Stanford Series*
C — **CL** = *Classic Series*
D — **ER** = *Elite Series*

Pantry& Utility Cabinets

2 Doors

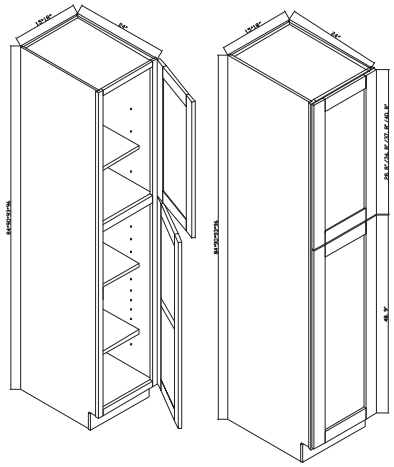

ITEM	Description	A	B	C	D
WP152484	15"Wx24"Dx84"H 2D 4S	839	940	965	1049
WP152490	15"Wx24"Dx90"H 2D 4S			1139	
WP152493	15"Wx24"Dx93"H 2D 4S	936	1048	1076	1170
WP152496	15"Wx24"Dx96"H 2D 4S			1165	
WP182484	18"Wx24"Dx84"H 2D 4S	901	1009	1036	1126
WP182490	18"Wx24"Dx90"H 2D 4S			1329	
WP182493	18"Wx24"Dx93"H 2D 4S	996	1116	1146	1246
WP182496	18"Wx24"Dx96"H 2D 4S			1374	

Pantry& Utility Cabinets

4 Doors

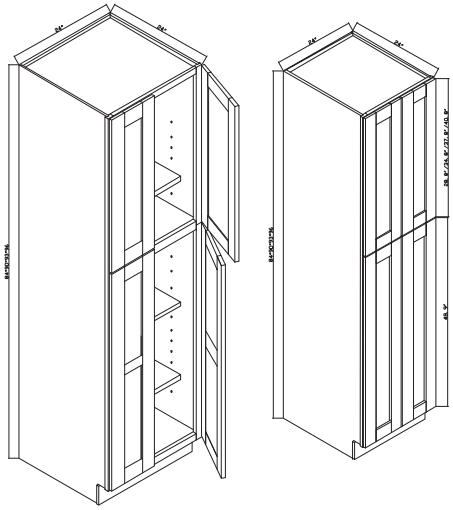

ITEM	Description	A	B	C	D
WP242484	24"Wx24"Dx84"H 4D 4S	1019	1141	1172	1274
WP242490	24"Wx24"Dx90"H 4D 4S			1352	
WP242493	24"Wx24"Dx93"H 4D 4S	1172	1313	1348	1465
WP242496	24"Wx24"Dx96"H 4D 4S			1510	

Single or Double Oven Cabinets

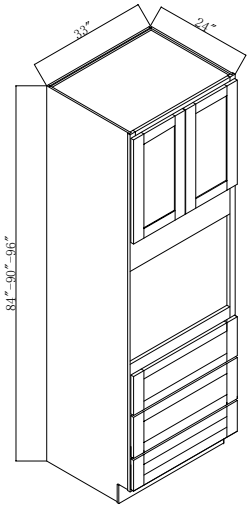

ITEM	Description	A	B	C	D
OC332484	(1 oven, can be modified to 2)	1553	1740	1787	1942
OC332490	(1 oven, can be modified to 2)			1843	
OC332493	(1 oven, can be modified to 2)	1664	1864	1914	2080
OC332496	(1 oven, can be modified to 2)			2101	

Accessories - Fillers

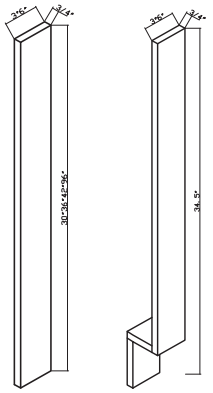

ITEM	Description	A	B	C	D
WF3	Wall Filler 30"x3"	36	36	36	36
WF6	Wall Filler 30"x6"	55	55	55	55
WF42	Filler strip (wall) 3"Wx42"Hx⅝"D	96	96	96	96
BF3	Base Filler 3"x34½"x⅝"	58	58	58	58
BF6	Base Filler 6"x34½"x⅝"	78	78	78	78
FS-330FL	Fluted Filler 3"x30"		44	44	44
FS-342FL	Fluted Filler 3"x42"		55	55	55
BF-3FL	Base Filler Fluted Filler 3"x34½"		60	60	60
TF 3"x96"	Tall Filler 3"x96"	121	121	121	121
TF 6"x96"	Tall Filler 6"x96"	223	223	223	223

Accessories - Moldings

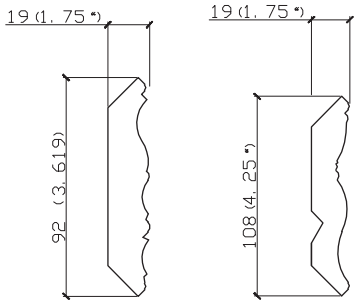

CROWN 2 CROWN 3

ITEM	Description	A	B	C	D
CROWN 2	8'Lx2½"Wx¾"D	122	122	122	122
CROWN 3	8'Lx3½"Wx¾"D	155	155	155	155
RM	Rope Molding ¾"Wx8'L				79
OCM8	Outside Corner Molding ¾"x¼"	34	34	34	38
TLR8	Traditional Light Rail 96"Wx1"Hx1⅙"D	110	110	110	110
1" Scribe molding	1"x96"x¼" (50 pcs.)	23	23	23	23
CB10	Colonial Base 10 4½"x¾"x8	195	195	195	195

Accessories - Panels

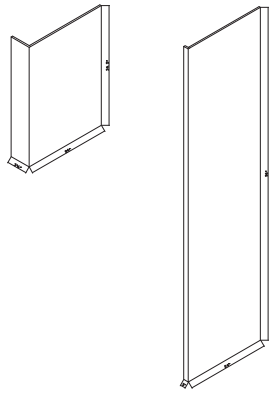

ITEM	Description	A	B	C	D
DEP3	Dishwasher End Panel 34½"Hx24"Dx3"W	109	109	109	109
DEP6	Dishwasher End Panel 34½"Hx24"Dx6"W	145	145	145	145
PLY4x8S	Plywood Sheet 4'x8'x¼"	273	273	273	273
REP 3"x96"	Refrigerator End Panel 24"Wx96"Hx3"TH	321	321	321	321
TK8	Toe Kick 8"Plywood 4⅜"Wx96"Hx⅛"D	48	48	48	48

Wall Posts - Full Post Fluted

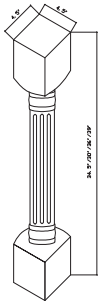

ITEM	Description	A	B	C	D
WPP30-2	30"Hx4½"Dx4½"W	290	290	290	290
WPP36-2	36"Hx4½"Dx4½"W	314	314	314	314
WPP39-2	39"Hx4½"Dx4½"W	360	360	360	360
WPP42-2	42"Hx4½"Dx4½"W	375	375	375	375

Wall Posts - Full Post Plain

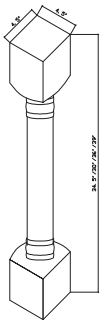

ITEM	Description	A	B	C	D
WPP30-1	30"Hx4½"Dx4½"W	285	285	285	285
WPP36-1	36"Hx4½"Dx4½"W	304	304	304	304
WPP39-1	39"Hx4½"Dx4½"W	352	352	352	352
WPP42-1	42"Hx4½"Dx4½"W	368	368	368	368

Wall Posts - Split Post Fluted

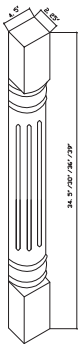

ITEM	Description	A	B	C	D
WPF30-2	30"Hx2½"Dx4½"W	214	214	214	214
WPF36-2	36"Hx2½"Dx4½"W	248	248	248	248
WPF39-2	39"Hx2½"Dx4½"W	275	275	275	275
WPF42-2	42"Hx2½"Dx4½"W	315	315	315	315

Wall Posts - Split Post Plain

ITEM	Description	A	B	C	D
WPF30-1	30"Hx2½"Dx4½"W	204	204	204	204
WPF36-1	36"Hx2½"Dx4½"W	238	238	238	238
WPF39-1	39"Hx2½"Dx4½"W	265	265	265	265
WPF42-1	42"Hx2½"Dx4½"W	305	305	305	305

Base Posts - Full Base Post

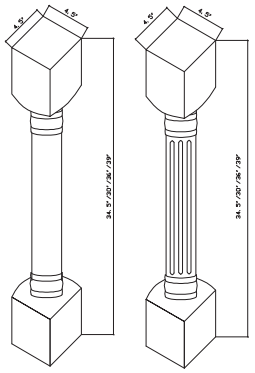

ITEM	Description	A	B	C	D
BPP-2	34½"Hx4½"Dx4½"W Fluted	314	314	314	314
BPP-1	34½"Hx4½"Dx4½"W Plain	304	304	304	304

Base Posts - Split Base Post

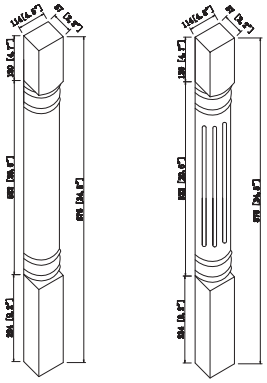

ITEM	Description	A	B	C	D
BPF-2	34½"Hx2½"Dx4½"W Fluted	274	274	274	274
BPF-1	34½"Hx2½"Dx4½"W Plain	264	264	264	264

Accessories - Decoratives

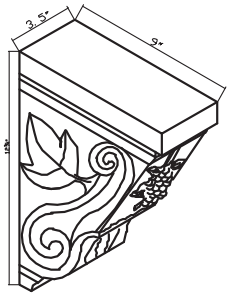

Grape Corbel

ITEM	Description	A	B	C	D
GRAPE CORBEL	Grape Corbel 12¾"Hx9"Dx3½"W		345	345	
LONLAYGR	Large Grape Onlay 20"Lx41/2"Hx⅝"TH		172	172	
VAS60	4½"x60" Wavey Valance	150	150	150	150
VAL1-30	30"W Arched Valance	115	115	115	115
VAL1-48	48"W Arched Valance	125	125	125	125
VAL1-60	60"W Arched Valance	145	145	145	145

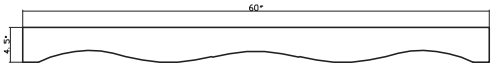

VAS60

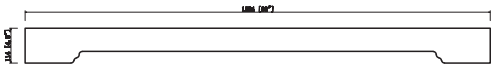

VAL1-60

Accessories - Vanities

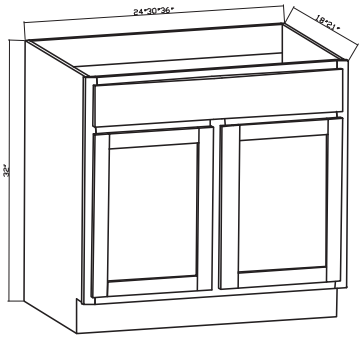

ITEM	Description	A	B	C	D
VA1816	18"Wx16"Dx30"H 1D 1H	201	201	201	
VA2418	24"Wx18"Dx30"H 2D 1H	243	243	243	
VA3018	30"Wx18"Dx30"H 2D 1H	261	261	261	
VA2421	24"Wx21"Dx30"H 2D 1H	325	325	325	
VA3021	30"Wx21"Dx30"H 2D 1H	398	398	398	
VA3621	36"Wx21"Dx30"H 2D 1H	410	410	410	
VDB1221-3	12"Wx21"Dx30"H 3 DR	541	541	541	

Deco Doors

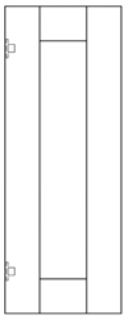

ITEM	Description	A	B	C	D
OVDB	Base Deco Door	169	189	194	211
OVDW30	30"H Wall Deco Door	107	120	123	134
OVDW36	36"H Wall Deco Door			142	
OVDW39	39"H Wall Deco Door	136	152	156	170
OVDW42	42"H Wall Deco Door			178	

Roll Out Drawer Box

ITEMS	DESCRIPTION	PRICE
ROT12	To Fit Inside 12" Base	$125
ROT15	To Fit Inside 15" Base	$136
ROT18	To Fit Inside 18" Base	$146
ROT21	To Fit Inside 21" Base	$157
ROT24	To Fit Inside 24" Base	$174

ITEMS	DESCRIPTION	PRICE
ROT27	To Fit Inside 27" Base	$193
ROT30	To Fit Inside 30" Base	$208
ROT33	To Fit Inside 33" Base	$220
ROT36	To Fit Inside 36" Base	$235

MODIFICATIONS

ITEMS	DESCRIPTION	NET PRICE
M-SBCUT	SINK BASE CABINET CUT DEPTH	$125
M-BCUT	BASE CABINET CUT DEPTH	$150
M-DBCUT	DRAWER BASE CABINET CUT DEPTH	$225
M-WCUT	WALL CABINET CUT DEPTH	$125
M-TCUT	TALL CABINET CUT DEPTH	$200
M-BCUTCHASE	BASE CABINET CHASE	$175
M-SBCUTCHASE	SINK BASE CABINET CHASE	$150
M-CUTTKBASE	CUT TOE KICK	$75
M-SHELFPINS	SHELF PINS	$0.50/EACH
M-HINGE	6 WAY ADJUSTABLE HINGE	$9/EACH
M-SOFTCLOSETRACKSET	SOFT CLOSE SLIDE SET	$28
M-SIDEMOUNTTRACKSET	SIDE MOUNT FULL EXT SLIDE SET	$28
GD-ANYSIZE	CLEAR GLASS DOOR	$125
SAMPLE DOOR	SAMPLE DOOR	$25
BUMPER	BUMPER	$0.50/EACH
FSB-MOIFY	FARM SINK	$225
TOUCHUP	TOUCH UP KIT	$19
SPRAY	SPRAY	$36
BMC-MOIFY	BASE MICROWAVE	$225

CUSTOM PAINTING FEE PRICES LIST

Please Note: The current lead time for "normal processing time" orders is 3–4 weeks for all cabinet from the date of placing the order to the date of the cabinets being shipped.

Door Style: Shaker / Raised Panel / Flat Panel / Arched / Recessed Panel

Please pick out color from Sherwin-Williams (www.sherwin-williams.com)

If customer want to pick darker color (Black), the price goes up by 15%–20%

	Exterior paint finishes (Door / Door Frame / Side Panels / Bottom Toe Kick) **NET PRICE**	**Interior and Exterior paint finishes** (Door / Door Frame / Side Panels / Bottom Toe Kick / Shelves / Inside all same color, except for the Drawer box) **NET PRICE**
Wall / Base / Drawer Base	$160	$200
Pantry	$250	$300
Valance	$15	$15
Wall Dummy Door	$25	$25
Base Dummy Door	$30	$30
Stand Post	$30	$30
Corbel	$30	$30
Base Filler	$10	$10
Wall Filler	$10	$10
Tall Filler	$20	$20
Outside Corner Molding	$10	$10
Scribe Molding	$10	$10
Light Rail Molding	$20	$20
Crown Molding	$30	$30
Toe Kick	$10	$10
Fridge Panel (both sides finished)	$50	$50
Panel 4'x8' (one side finished)	$50	$50
Dishwasher Panel	$30	$30

Return and Exchanges Policy

We do not offer returns or exchanges on custom cabinet due to the highly personalized nature ot the item. However, if there are any issues with your cabinet upon arrival please contact us with your order number and issue, and we will take care of you right away.

GENERAL INFORMATION

- All lines are soft close drawers and doors
- 3/15/25 This Price List **Supersedes ALL Previous**

TERMS AND CONDITIONS

DELIVERY

Delivery is 5% with minimum of $99 on all orders in NJ & CT and minimum of $125 in NY base. Job Site Deliveries are $175 in NJ and within 150 miles from our base and its curbside only.

Cabinet Assembly is $15 per cabinets

HANDLING FEE

In order for us to keep our prices competitive All invoices incur 2.5% handling fees to offset costs of supplies, handling and shipping.

PICKUP DISCOUNT

Orders picked from our facility qualify for 2% pickup discount.

RETURN POLICY

Bear in mind that there are no returns or exchanges on any assembled cabinets.

Unassembled cabinets in their original packing material can be returned with prior authorization and a 25% restocking fee and within 30 days for company credit only. No cash or credit card refund will be issued.

TERMS AND CONDITIONS OF SALE

- All prices are subject to change without a notice.
- All orders must be acknowledge and confirmed by us to be valid. We are not responsible for inventory shortage.
- MK wood reserve its right to terminate any customer account at management discretion and to the best interest of the company. MK Wood should not be liable or committed for any orders placed after the date the account is terminated. The customer will be notified of such action either verbally or in writing or both.
- All Products remain the property of MK Wood until satisfactory payment is received and accepted by the Company. In case of any defect MK Wood Limits its responsibility to replacement of the defected part or product Keeping in mind the availability and reasonable notice, and it should not be liable for any labor costs and any other costs arising from the sale including but not limited to loss of use or installation costs or damages to any other or near by products or home fixtures. It is the customer's responsibility to verify the condition and the availability of the product prior to the installation and to determines the proper use of the product.
- After customer signs the acknowledgement the company will consider this to be a sale and any cancellation or changes except for addition will be subject to the company's return policy. Orders that are not picked up or accepted or refused delivery weather is expressed or implied will incur a storage charges of 20 per day for the first 30 days and will be disposed of after 30 days at the customer's expenses. Customer remains liable for all costs.
- By placing an order, customer acknowledge the he or she received, agreed and accepted all terms and conditions of sales contained in this agreement and any deviation must be accepted in writing by the company management and that terms and condition that are contained in this agreement supersedes any other or prior agreements and sales.
- MK wood reserve its right to change any customer payment terms at management discretion and to the interest of the company. MK Wood reserve the right to hold a fully paid for orders until other unpaid orders are fully paid for. When one of the customer's orders is not paid for all the customer's other orders become due and no orders or partial orders to be released without a full payment for all orders is received and accepted by the company.

ORDER FORM

MK WOOD

MK Wood Cabinetry
55 Lathrop Road, Ext #1,
Plainfield, CT 06374
TEL: 973.450.5110
FAX: 973.450.5112
www.mkwoodcabinets.com
orders@mkwoodcabinets.com

Color Name: ______________________

☐ Initial Order ☐ Add on

Date: ______________________

Company Name : ______________________

P.O.#: ______________________

Address: ______________________

Ordered By: ______________________

Special Instruction: ______________________

Tel: ______________________

Fax: ______________________

☐ Delivery ☐ Pick Up

Email: ______________________

☐ Assembled ☐ K.D.

Qty	Code/Description	List Price	Total

Sub Total	
Multiplier	
Total	
Color Upgrade	
Total	
Assembly	
Delivery Charge	
Grand Total	

☐ **EL** = Elegance Series
☐ **SR** = Shaker Series
☐ **PS** = Petite Shaker Series
☐ **PF** = Plainfield Series
☐ **ST** = Stanford Series
☐ **CL** = Classic Series
☐ **ER** = Elite Series

LIMITED LIFETIME AND LIMITED FIVE YEAR WARRANTY

WARRANTY COVERAGE

Limited Lifetime Warranty on Drawer Guides and Hinges. **MK WOOD** warrants to the original purchasing consumer, for as long as they own their home, that the drawer guides and hinges shall be free from defects in material and workmanship under normal use.

Limited 5 Year Warranty on Cabinets. These cabinets and related cabinet work assembled by **MK WOOD**, are warranted to the original purchasing consumer **FIVE YEAR** from the date of original purchase or as long as the original purchasing consumer owns the home, whichever is less, against avoidable and unnatural defects in material and workmanship under normal use.

Product must be registered within 90 days of purchase. To register your product please visit: www.mkwoodcabinets.com/home-owner-corner

WARRANTY EXCLUSIONS

THIS WRITING IS THE COMPLETE AND EXCLUSIVE STATEMENT OF THE EXPRESS WARRANTIES PROVIDED HEREIN AND IS IN LIEU OF ALL OTHER EXPRESS AND/OR STATUTORY WARRANTIES BY THE MANUFACTURER, TO THE EXTENT PROVIDED BY LAW. THERE ARE NO IMPLIED WARRANTIES EXTENDING BEYOND THE TERMS OF THIS WARRANTY. MK WOOD SHALL NOT BE LIABLE FOR ANY INCIDENTAL OR CONSEQUENTIAL COSTS, EXPENSES OR DAMAGES. (Some states do not allow limitations or exclusions of incidental or consequential damages, so the above limitations and exclusions may not apply to you. This warranty gives you specific legal rights, and you may have other legal rights which vary from state to state).

WARRANTY LIMITATIONS

- THIS WARRANTY DOES NOT COVER PROBLEMS CAUSED BY IMPROPER INSTALLATION OF CABINETS, CABINETWORK, DRAWER GUIDES OR HINGES.
- THIS WARRANTY DOES NOT COVER ANY PRODUCT USED OR INSTALLED IN CONNECTION WITH CABINETS, SUCH AS GAS OR ELECTRIC APPLIANCES, COUNTERTOPS OR PLUMBING FIXTURES.
- THIS WARRANTY DOES NOT COVER DAMAGE CAUSED BY TRANSPORTATION, STORAGE OR EXPOSURE TO EXCESSIVE TEMPERATURES AND/OR HUMIDITY OR TO DEFECTS ARISING FROM MISUSE, NEGLECT, ACCIDENT, ALTERATION, IMPROPER USE OR CARE OR FAILURE TO MAINTAIN.

WARRANTY DISCLAIMERS

- This warranty is not transferable.
- Wood characteristics naturally occurring such as variations in color, grain, mineral streaks and knots are not considered defects.
- Color variations in cabinets are a natural occurrence due to species, age, character of cabinets, and exposure to UV light and sunlight. For these reasons, new and/or replacement cabinets may not match display samples and/or existing cabinets. Such variations and changes are not considered defects.

WARRANTY PERFORMANCE

If a manufacturing defect does occur within the terms and conditions of this warranty such defective part will be repaired or replaced by **MK WOOD**, as its sole option. **MK WOOD** will not provide or pay for the cost of removal of defective product, transportation of defective, repaired or replaced product or installation of repaired or replaced product.

where

Exceptional Quality

meets

Affordable Pricing

MK WOOD

MK WOOD

MK Wood Cabinetry
55 Lathrop Road, Ext #1,
Plainfield, CT 06374
tel: 973.450.5110
fax: 973.450.5112
www.mkwoodcabinets.com
info@mkwoodcabinets.com